ROOF PLAN - Pre-Engineered Canopy System
Material: Aluminum
Paint Color: White
Fabric: Soltis 86
Scale: 1/32" = 1'-0"

1

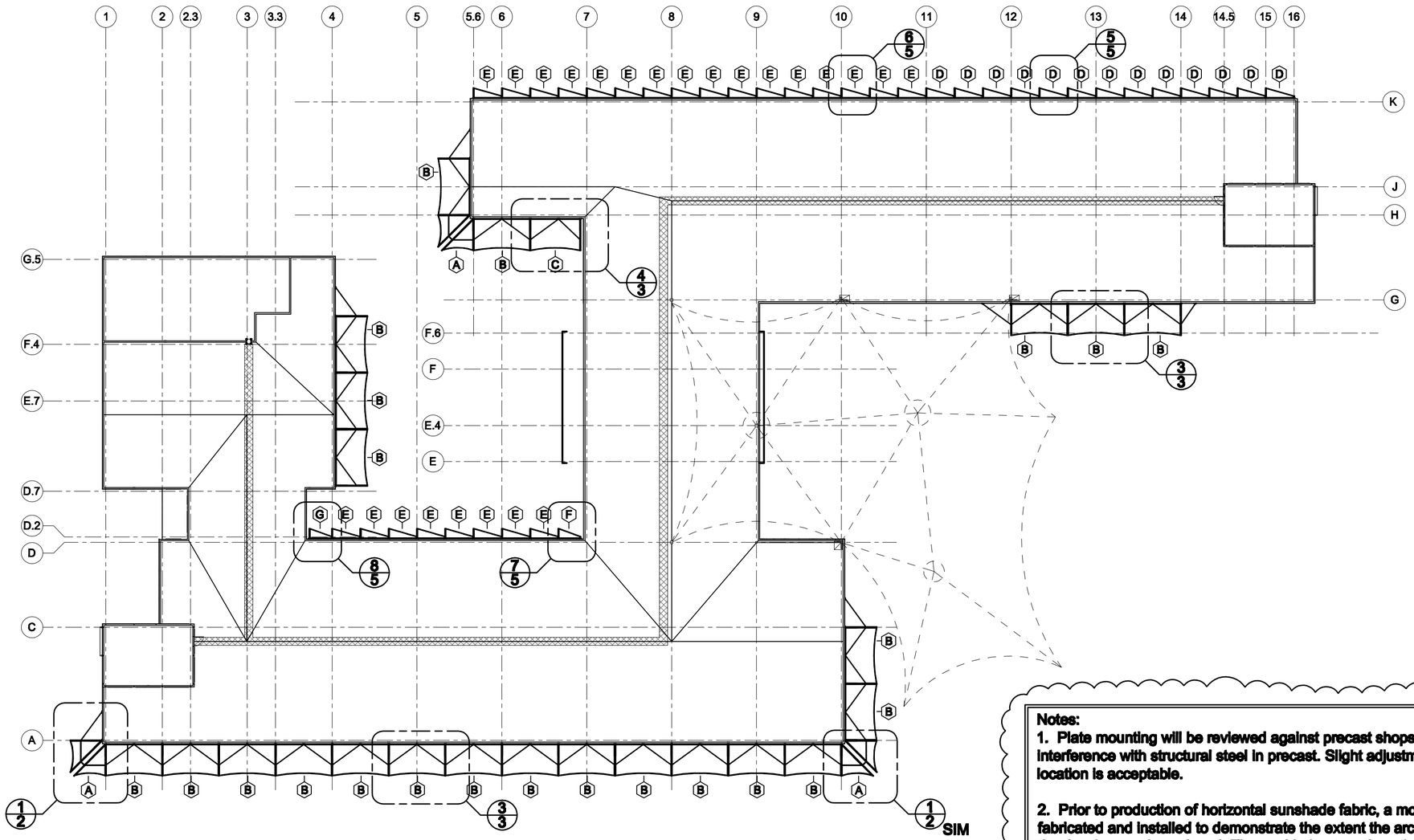

Notes:
1. Plate mounting will be reviewed against precast shops to avoid interference with structural steel in precast. Slight adjustment of plate location is acceptable.

2. Prior to production of horizontal sunshade fabric, a mockup will be fabricated and installed to demonstrate the extent the arc reflected on the drawing can be reduced. The goal being to reduce the apex of arc dimensions to approximately 12"-16".

1

General Design Information

2010 FLORIDA BUILDING CODE, ASCE 7-10
RISK CATEGORY II, ULT. WIND SPEED 146 MPH (113 MPH ASD)
I=1.0, Kz=0.92, G=0.85
DESIGNED AS OPEN STRUCTURE, OBSTRUCTED FLOW

GENERAL NOTES

1. THIS SYSTEM HAS BEEN DESIGNED AND SHALL BE FABRICATED IN ACCORDANCE WITH THE REQUIREMENTS OF THE 2010 FLORIDA BUILDING CODE.

2. THE EXISTING HOST STRUCTURE MUST BE CAPABLE OF SUPPORTING THE LOADED CANOPY SYSTEM AS VERIFIED BY THE ARCHITECT/ENGINEER OF RECORD. NO WARRANTY, EITHER EXPRESSED OR IMPLIED, IS CONTAINED HEREIN.

3. ALL FASTENERS TO BE # 10 X 3/4" OR GREATER 2024-T4, 18-8 SERIES 300 NON-MAGNETIC STAINLESS STEEL, OR CADMIUM PLATED OR OTHERWISE CORROSION RESISTANT MATERIAL AND SHALL COMPLY WITH 5.1.1C, SPECIFICATIONS FOR ALUM. STRUCTURES -SECTION 1, THE ALUMINUM ASSOCIATION,INC., & APPLICABLE FEDERAL,STATE, AND LOCAL CODES.

4. ALL EXTRUDED MEMBERS SHALL BE ALUMINUM ALLOY TYPE 6063-T6, 6061-T6, OR 6005-T5.

5. ALL WELDING SHALL BE DONE BY AN AWS CERTIFIED WELDER OR SHALL CONFORM TO AISC STEEL CONSTRUCTION MANUAL 13TH ED. MIN. WELD $\frac{1}{4}$" FILLET WELD.

6. THE CONTRACTOR IS RESPONSIBLE TO INSULATE ALUMINUM MEMBERS FROM DISSIMILAR METALS TO PREVENT ELECTROLYSIS.

7. EXCEPT AS EXPRESSLY PROVIDED HEREIN, NO ADDITIONAL CERTIFICATIONS OR AFFIRMATIONS ARE INTENDED.

Client Name & Project

Eckerd College
Center For Molecular And Life Sciences
Pre-Engineered Canopy System

Manufacturer

AWNING WORKS incorporated
14115 63Rd Way N. - Clearwater, Fl 33760
Tel: 727.524.1118 - Fax: 727.524.3110
awnings@awningworksinc.com
www.awningworksinc.com
Certified General Contractor
License # CGC1511475

Structural Engineer

1 05.17.11

Copyright Notes

Date
Sheet 1 of 9
Title

1/2 PLAN DETAIL - Pre-Engineered Canopy System - CANOPY 'A'
Material: Aluminum
Paint Color: White
Fabric: Soltis 86
Quantity: 3
Scale: 3/8" = 1'-0"

1

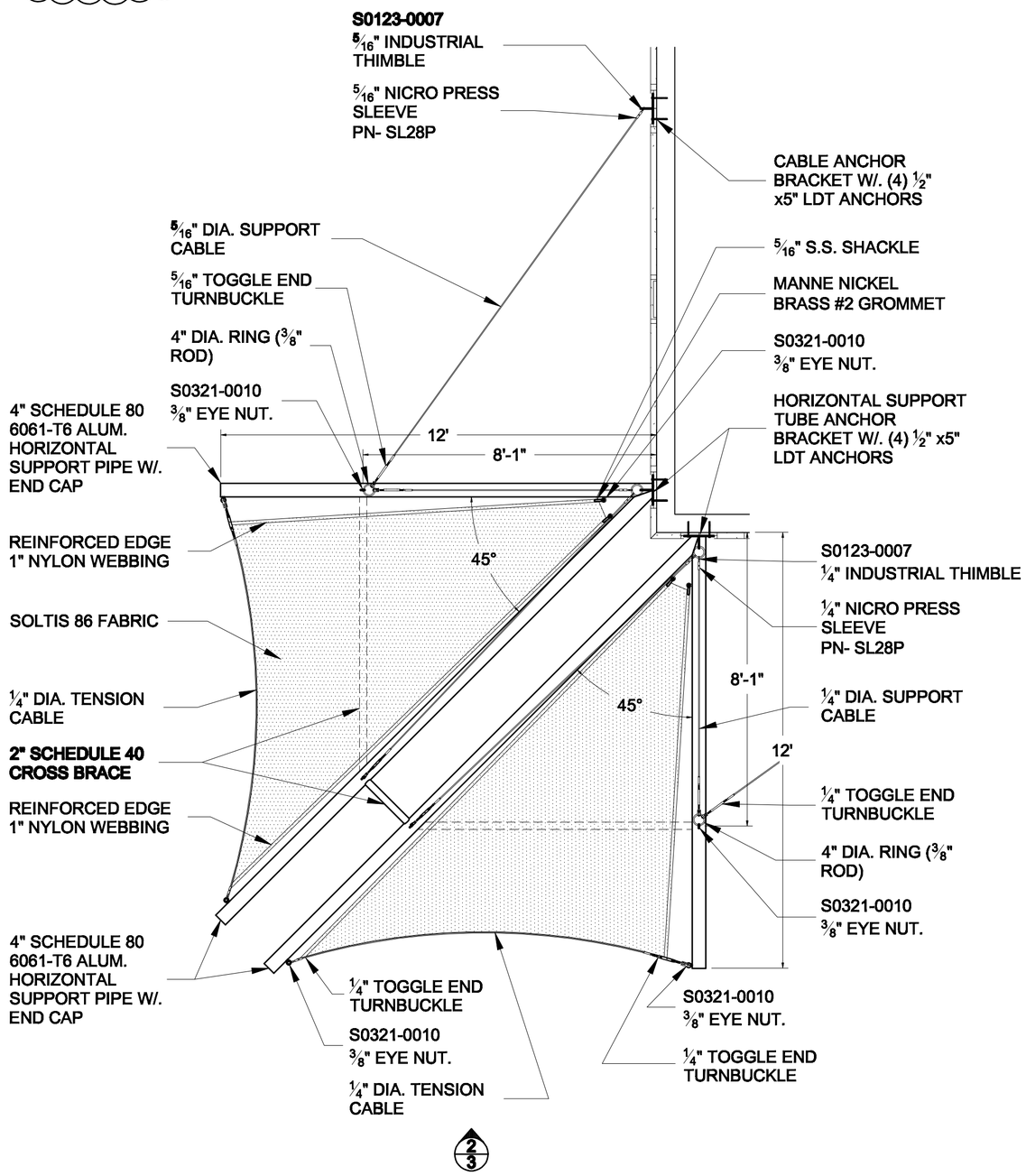

2/3

2/2 ELEVATION DETAIL - Pre-Engineered Canopy System - CANOPY 'A'
Material: Aluminum
Paint Color: White
Fabric: Soltis 86
Quantity: 3
Scale: 3/8" = 1'-0"

1

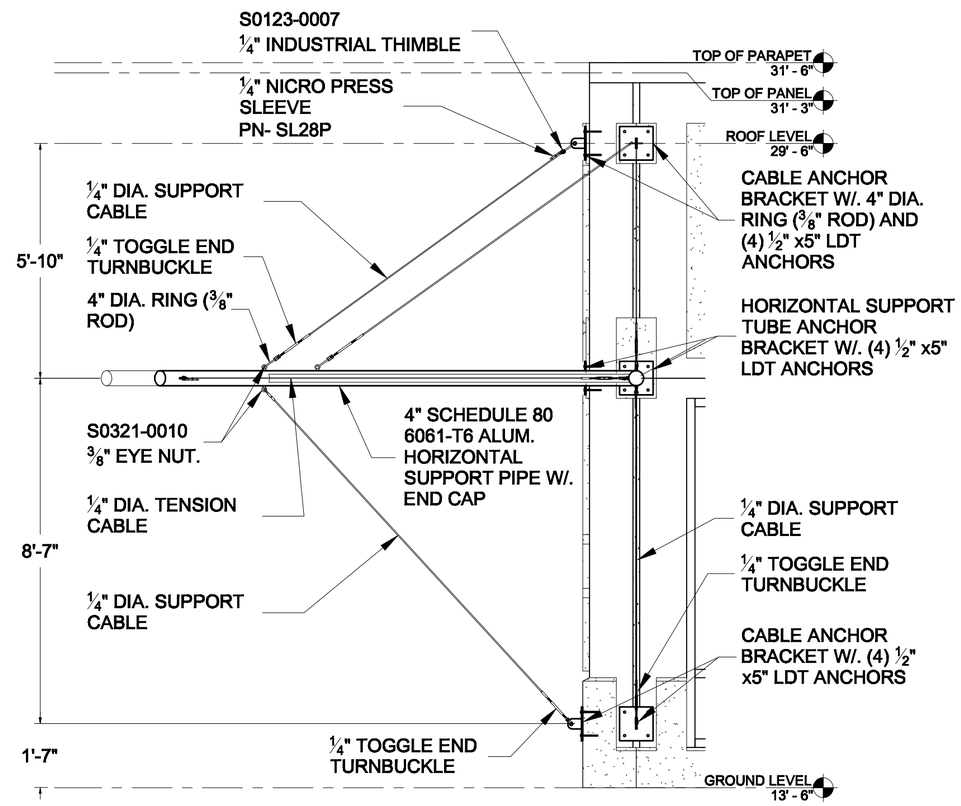

Client Name & Project

Eckerd College
Center For Molecular And Life Sciences
Pre-Engineered Canopy System

Manufacturer

AWNING WORKS Incorporated
14115 63Rd Way N. - Clearwater, Fl 33760
Tel: 727.524.1118 - Fax: 727.524.3110
awnings@awningworksinc.com
www.awningworksinc.com
Certified General Contractor
License # CGC1511475

Structural Engineer

1 05.17.11

Copyright Notes

Date

Sheet
2 of 9

Title

3/3 PLAN DETAIL - Pre-Engineered Canopy System - CANOPY 'B'
Material: Aluminum
Paint Color: White
Fabric: Soltis 86
Quantity: 23
Scale: 3/8" = 1'-0"

1

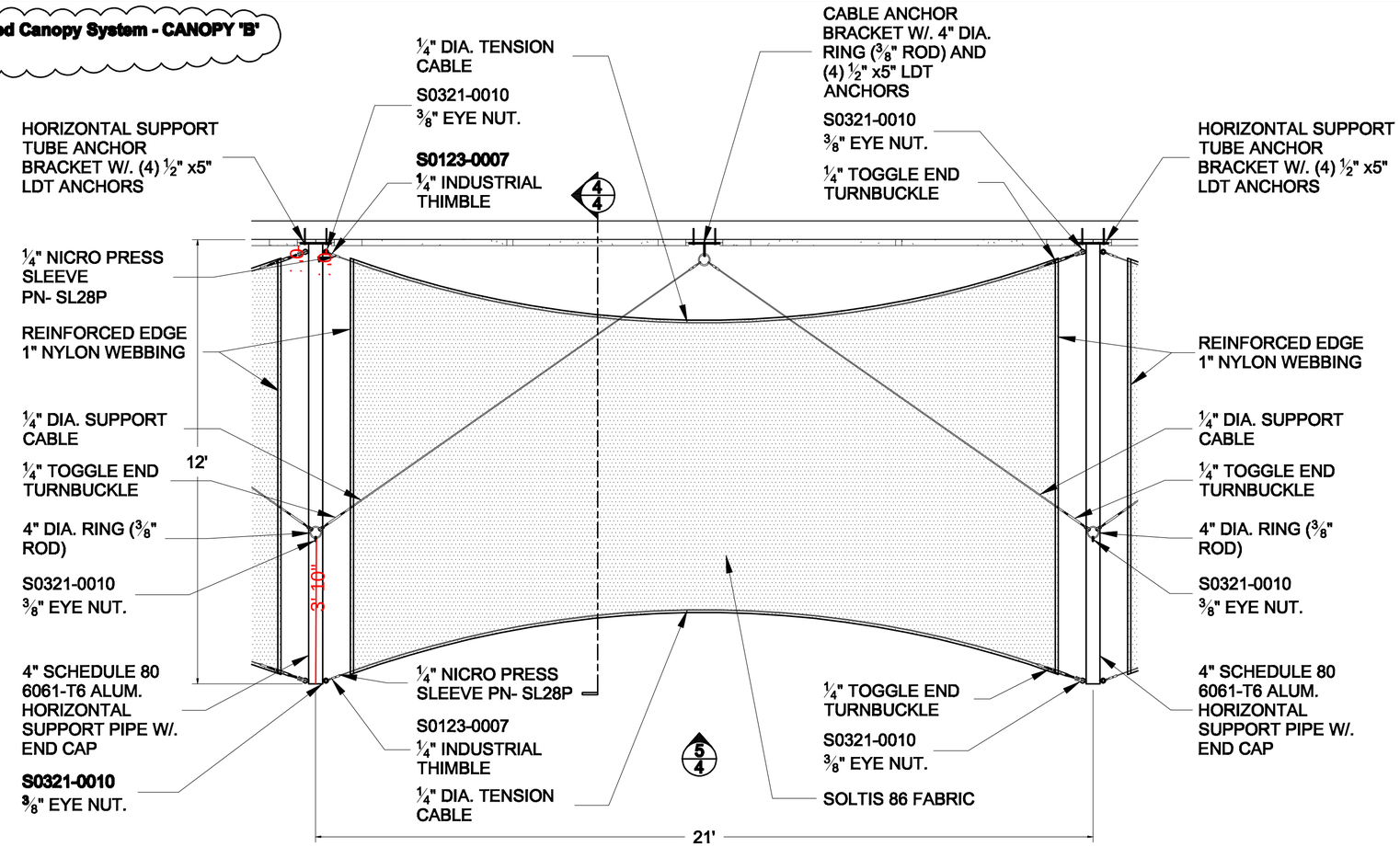

4/3 PLAN DETAIL - Pre-Engineered Canopy System - CANOPY 'C'
Material: Aluminum
Paint Color: White
Fabric: Soltis 86
Quantity: 1
Scale: 3/8" = 1'-0"

1

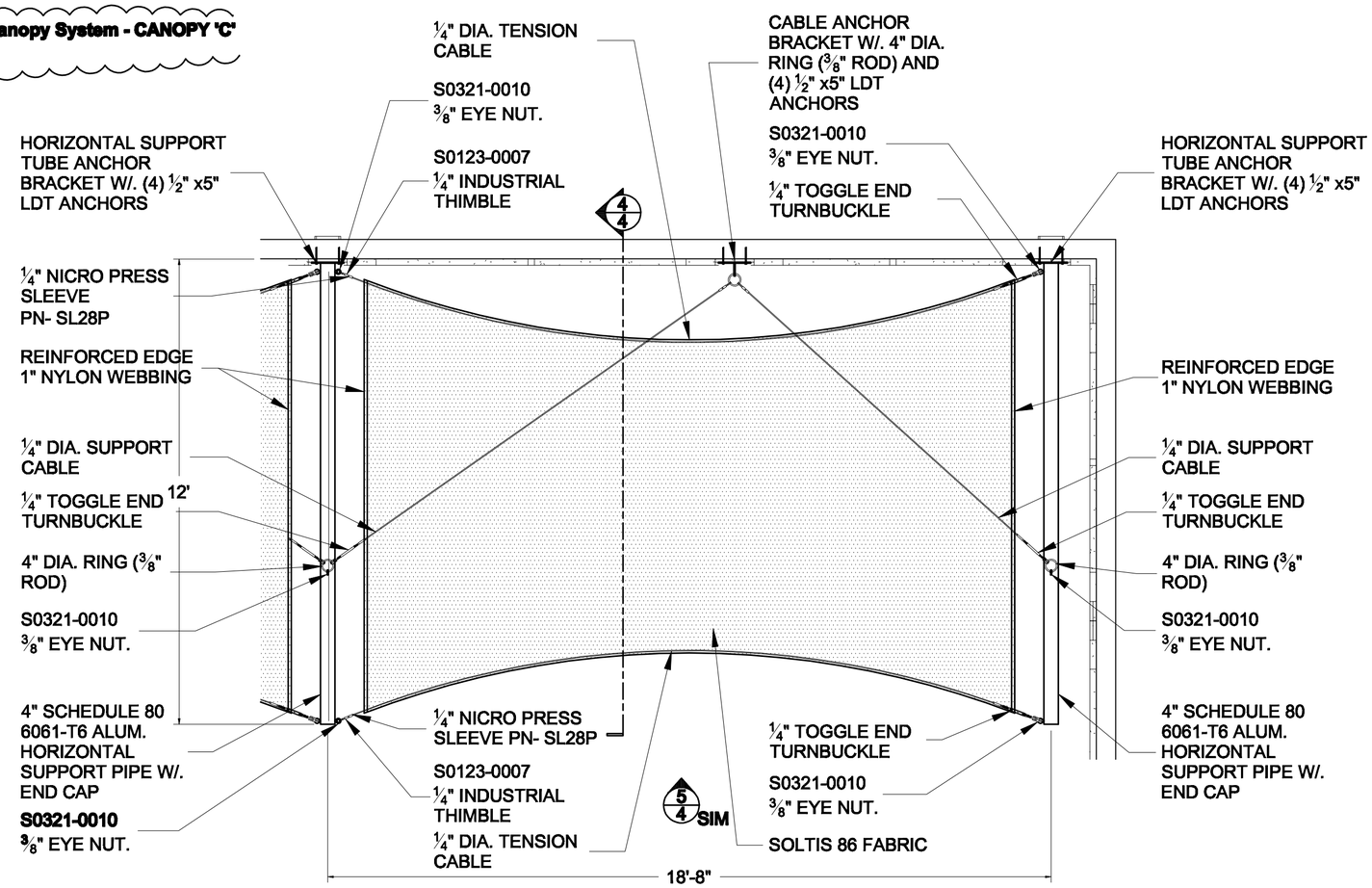

Client Name & Project

Eckerd College
Center For Molecular And Life Sciences
Pre-Engineered Canopy System

Manufacturer

AWNING WORKS incorporated
14115 63Rd Way N. - Clearwater, Fl 33760
Tel: 727.524.1118 - Fax: 727.524.3110
awnings@awningworksinc.com
www.awningworksinc.com
Certified General Contractor
License # CGC1511475

Structural Engineer

1 05.17.11

Copyright Notes

Date: 5/16/2011
Sheet: 3 of 9
Title: Sheet Metal

4/4 Section - Pre-Engineered Canopy System - CANOPIES 'B' AND 'C'
Material: Aluminum
Paint Color: White
Fabric: Soltis 86
Scale: 3/8" = 1'-0"

1

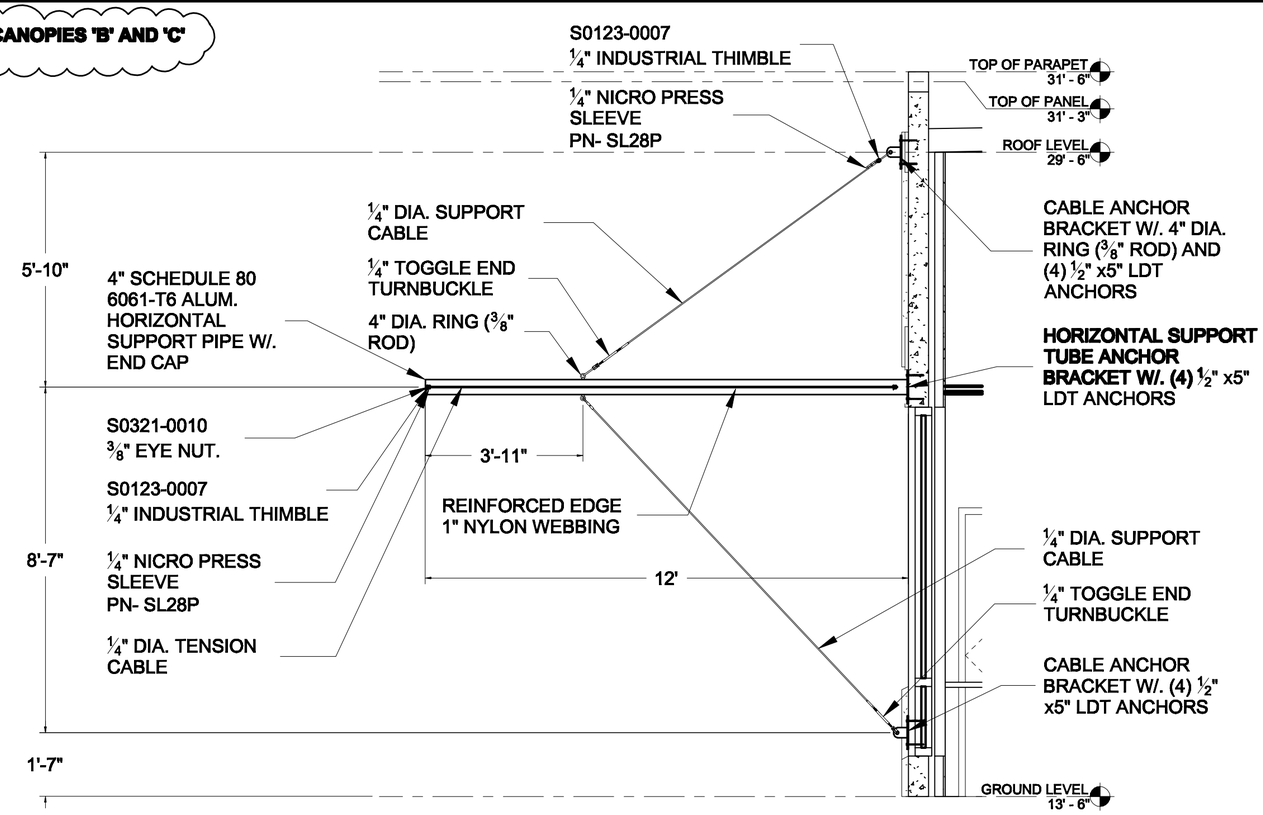

5/4 Elevation - Pre-Engineered Canopy System - CANOPIES 'B' AND 'C'
Material: Aluminum
Paint Color: White
Fabric: Soltis 86
Scale: 3/8" = 1'-0"

1

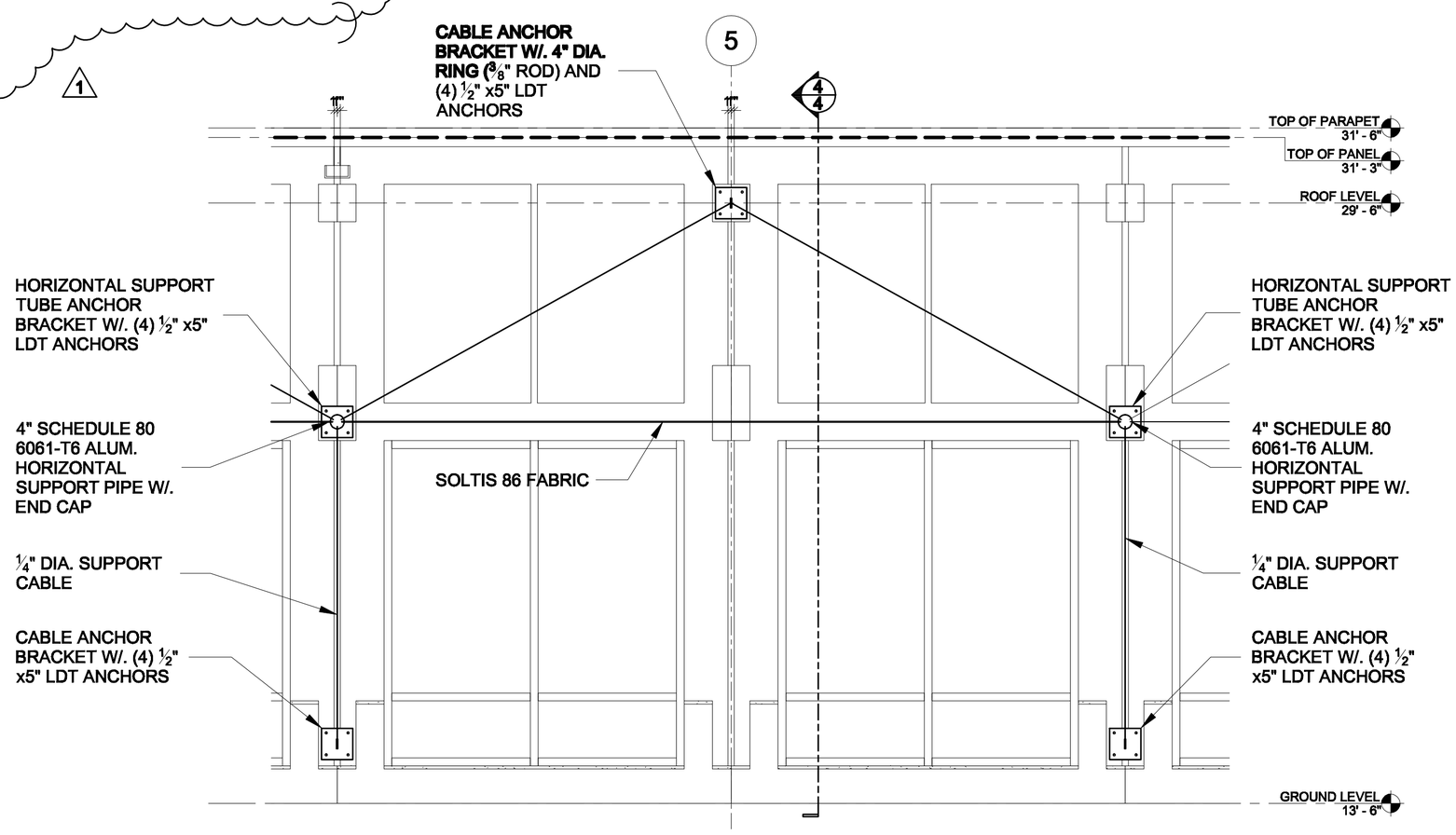

Client Name & Project

Eckerd College
Center For Molecular And Life Sciences
Pre-Engineered Canopy System

Manufacturer

AWNING WORKS incorporated
14115 63Rd Way N. - Clearwater, Fl 33760
Tel: 727.524.1118 - Fax: 727.524.3110
awnings@awningworksinc.com
www.awningworksinc.com
Certified General Contractor
License # CGC1511475

Structural Engineer

1 05.17.11

Copyright Notes

Date
Sheet 4 of 9
Title

5/5 **Plan Detail - Pre-Engineered Canopy System - CANOPY 'D'**
Material: Aluminum
Paint Color: White
Fabric: Soltis 86
Quantity: 13
Scale: 3/8" = 1'-0"

1

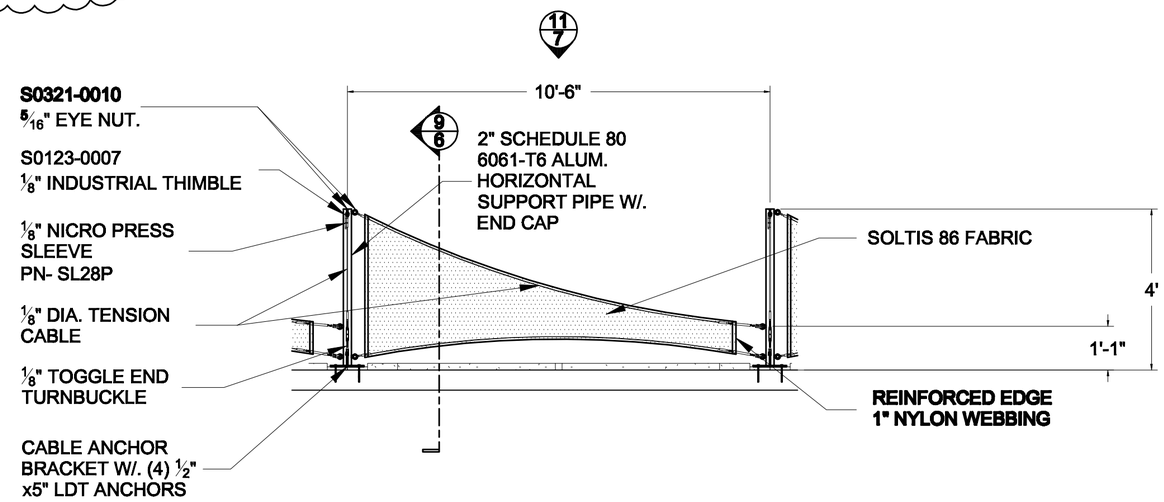

6/5 **Plan Detail - Pre-Engineered Canopy System - CANOPY 'E'**
Material: Aluminum
Paint Color: White
Fabric: Soltis 86
Quantity: 24
Scale: 3/8" = 1'-0"

1

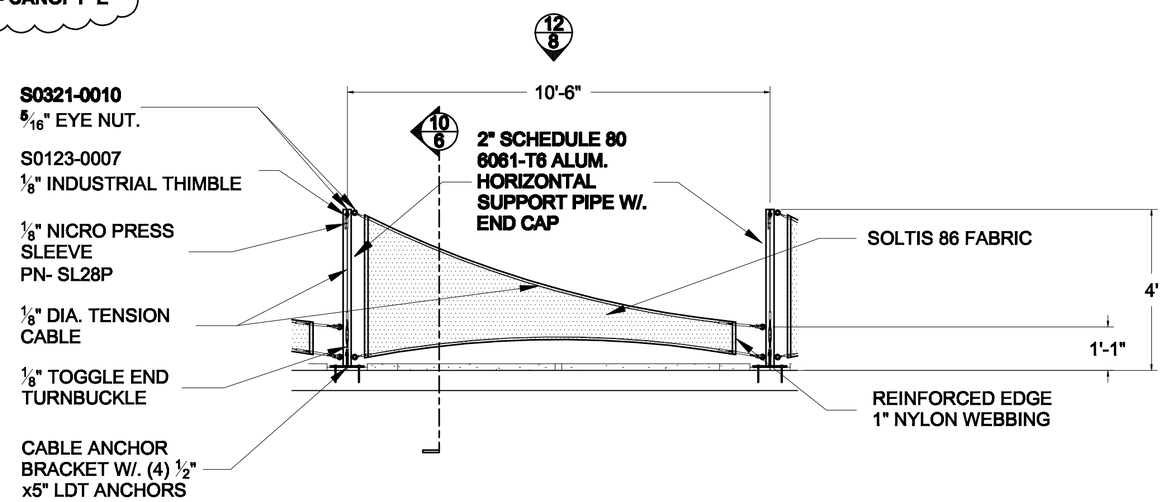

7/5 **Plan Detail - Pre-Engineered Canopy System - CANOPY 'F'**
Material: Aluminum
Paint Color: White
Fabric: Soltis 86
Quantity: 1
Scale: 3/8" = 1'-0"

1

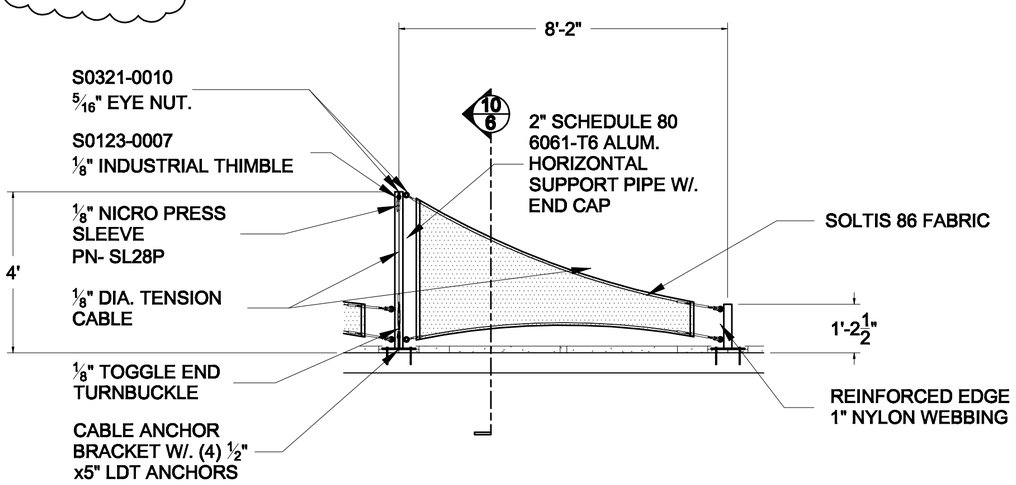

8/5 **Plan Detail - Pre-Engineered Canopy System - CANOPY 'G'**
Material: Aluminum
Paint Color: White
Fabric: Soltis 86
Quantity: 1
Scale: 3/8" = 1'-0"

1

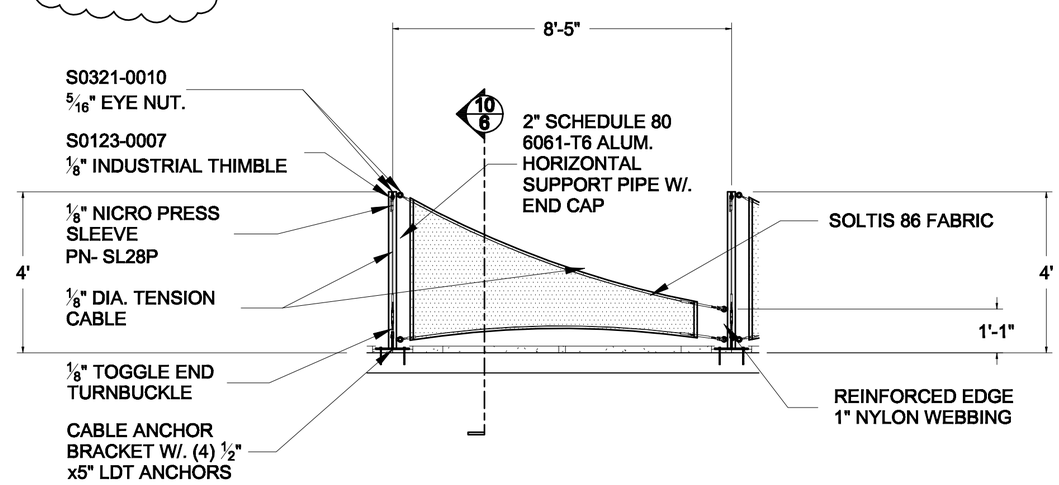

Client Name & Project

Eckerd College
Center For Molecular And Life Sciences
Pre-Engineered Canopy System

Manufacturer

AWNING WORKS incorporated
14115 63Rd Way N. - Clearwater, Fl 33760
Tel: 727.524.1118 - Fax: 727.524.3110
awnings@awningworksinc.com
www.awningworksinc.com
Certified General Contractor
License # CGC1511475

Structural Engineer

1 05.17.11

Copyright Notes

Date 07/05/2010

Sheet 5 of 9

Title Detail Plan

9/6 Section - Pre-Engineered Canopy System - CANOPY 'D'

Material: Aluminum
Paint Color: White
Fabric: Soltis 86
Quantity: 13
Scale: 3/8" = 1'-0"

1

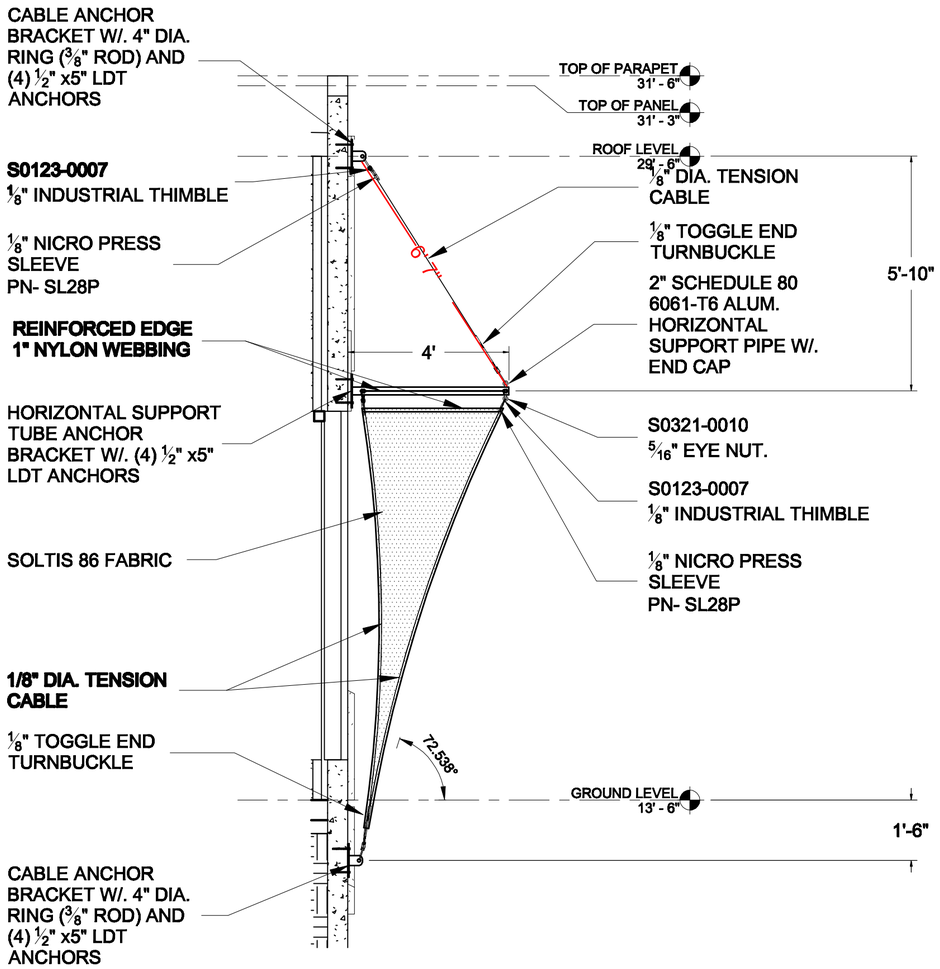

10/6 Section - Pre-Engineered Canopy System - CANOPIES 'E', 'F', AND 'G'

Material: Aluminum
Paint Color: White
Fabric: Soltis 86
Scale: 3/8" = 1'-0"

1

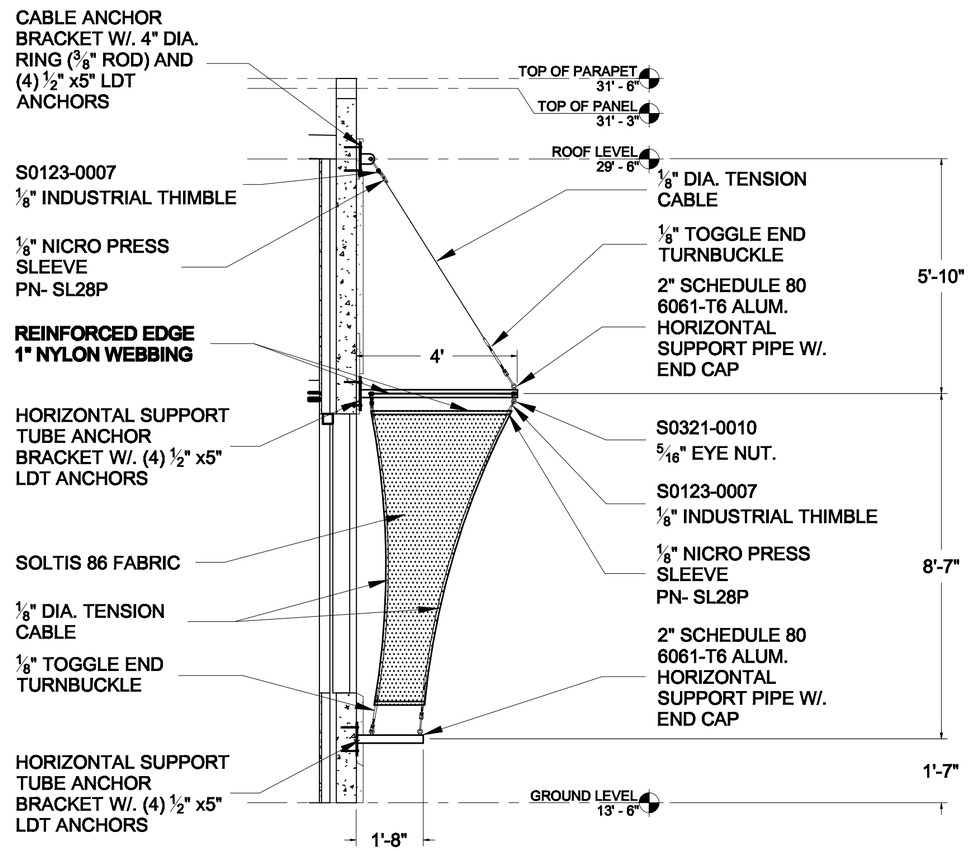

Client Name & Project

Eckerd College
Center For Molecular And Life Sciences
Pre-Engineered Canopy System

Manufacturer

AWNING WORKS Incorporated
14115 63Rd Way N. - Clearwater, Fl 33760
Tel: 727.524.1118 - Fax: 727.524.3110
awnings@awningworksinc.com
www.awningworksinc.com
Certified General Contractor
License # CGC1511475

Structural Engineer

1 05.17.11

Copyright Notes

Date

Sheet 6 of 9

File

11/7 Elevation - Pre-Engineered Canopy System - CANOPY 'D'
Material: Aluminum
Paint Color: White
Fabric: Soltis 86
Scale: 3/8" = 1'-0"

1

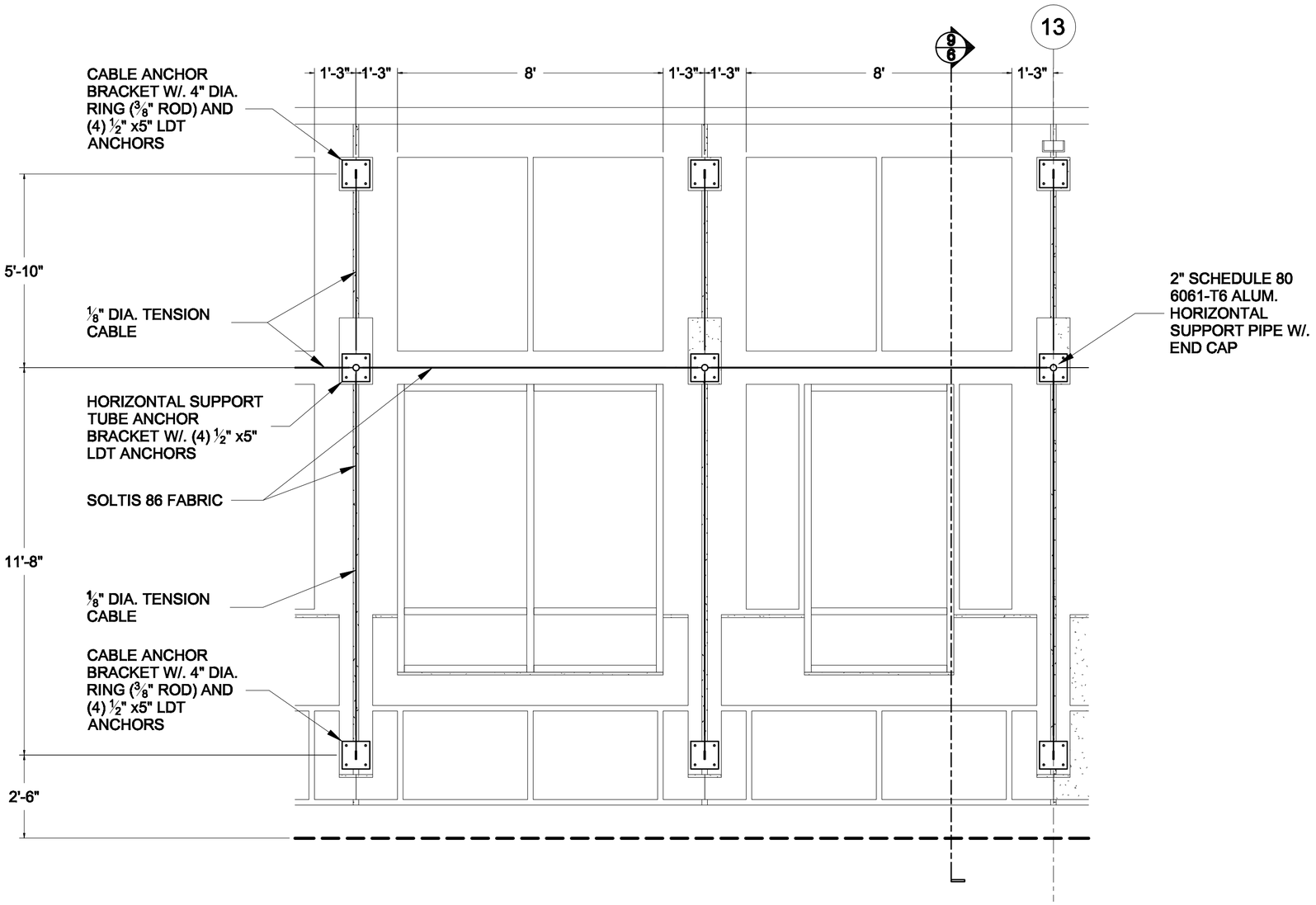

Client Name & Project

Eckerd College
Center For Molecular And Life Sciences
Pre-Engineered Canopy System

Manufacturer

AWNING WORKS incorporated
14115 63Rd Way N. - Clearwater, Fl 33760
Tel: 727.524.1118 - Fax: 727.524.3110
awnings@awningworksinc.com
www.awningworksinc.com
Certified General Contractor
License # CGC1511475

Structural Engineer

1 05.17.11

Copyright Notes

Date

Sheet
7 of 9

Title

12/8 Elevation - Pre-Engineered Canopy System - CANOPIES 'E', 'F', AND 'G'
Material: Aluminum
Paint Color: White
Fabric: Soltis 86
Scale: 3/8" = 1'-0"

1

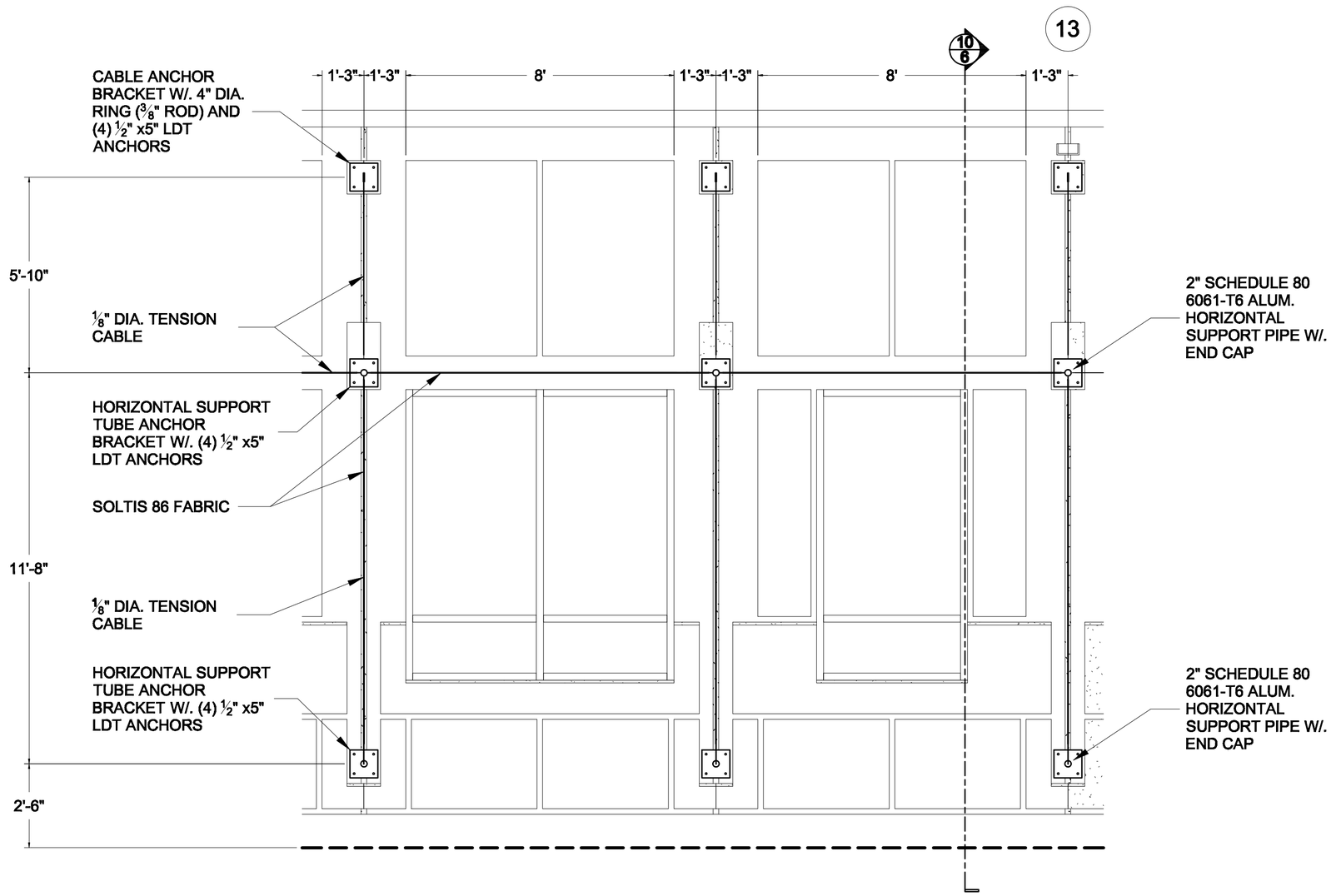

1

Client Name & Project

Eckerd College
Center For Molecular And Life Sciences
Pre-Engineered Canopy System

Manufacturer

AWNING WORKS incorporated
14115 63Rd Way N. - Clearwater, Fl 33760
Tel: 727.524.1118 - Fax: 727.524.3110
awnings@awningworksinc.com
www.awningworksinc.com
Certified General Contractor
License # CGC1511475

Structural Engineer

1 05.17.11

Copyright Notes

Date

Sheet
8 of 9

Title

13/9 Detail - Horizontal Support Tube Anchor (4" Support Pipe)
Material: Aluminum
Paint Color: White
Quantity: 33
Scale: 3" = 1'-0"

1

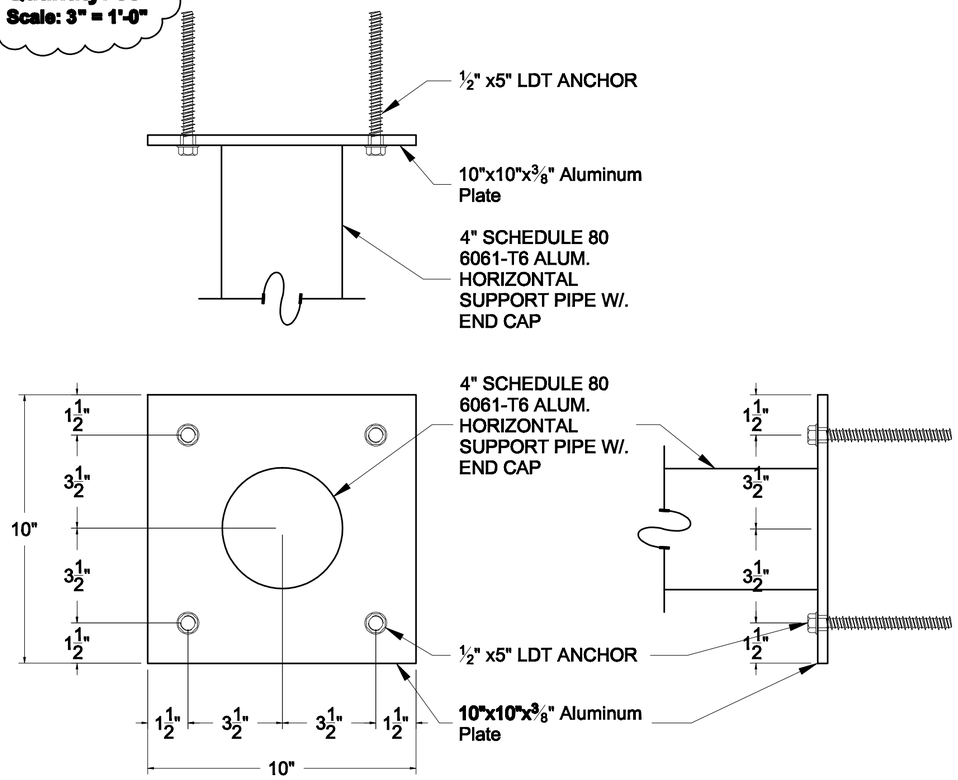

14/9 Detail - Cable Anchor
Material: Aluminum
Paint Color: White
Quantity: 122
Scale: 3" = 1'-0"

1

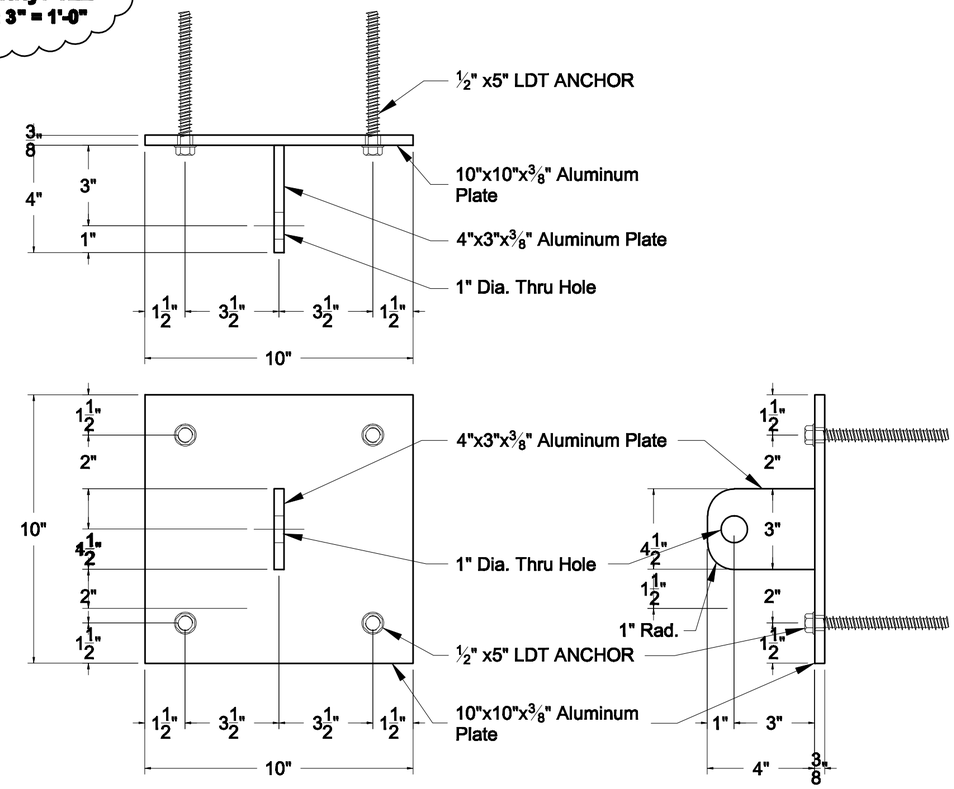

15/9 Detail - Horizontal Support Tube Anchor (2" Support Pipe)
Material: Aluminum
Paint Color: White
Quantity: 66
Scale: 3" = 1'-0"

1

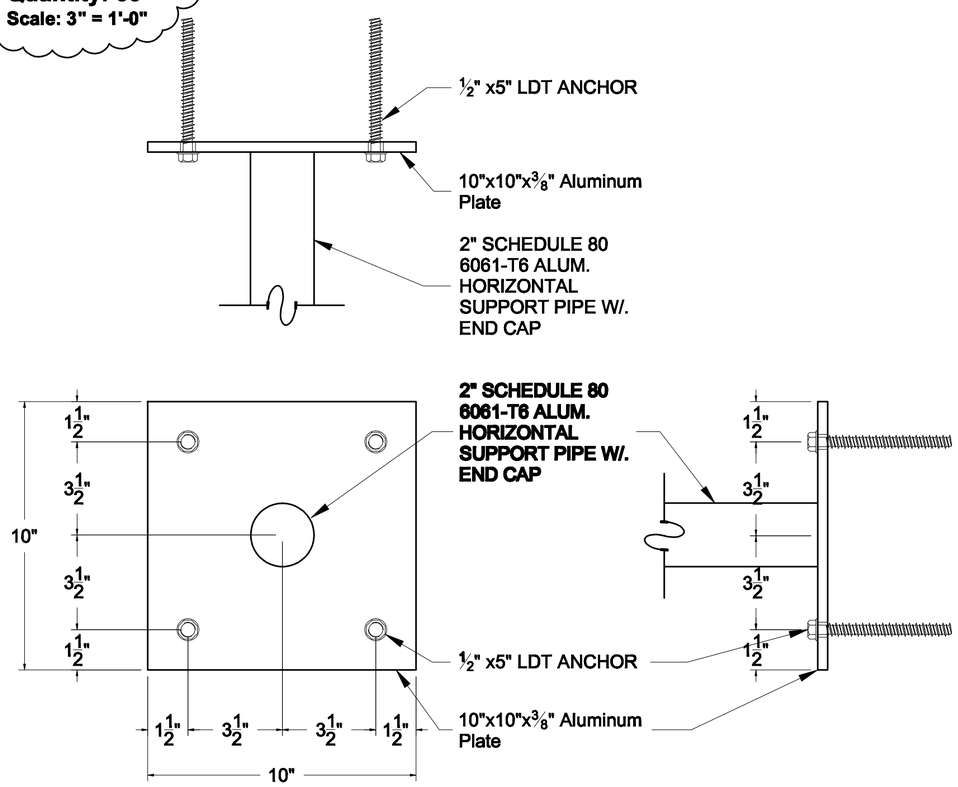

Client Name & Project

Eckerd College
Center For Molecular And Life Sciences
Pre-Engineered Canopy System

Manufacturer

AWNING WORKS incorporated
14115 63Rd Way N. - Clearwater, Fl 33760
Tel: 727.524.1118 - Fax: 727.524.3110
awnings@awningworksinc.com
www.awningworksinc.com
Certified General Contractor
License # CGC1511475

Structural Engineer

1 05.17.11

Copyright Notes

Date

Sheet
9 of 9

Title