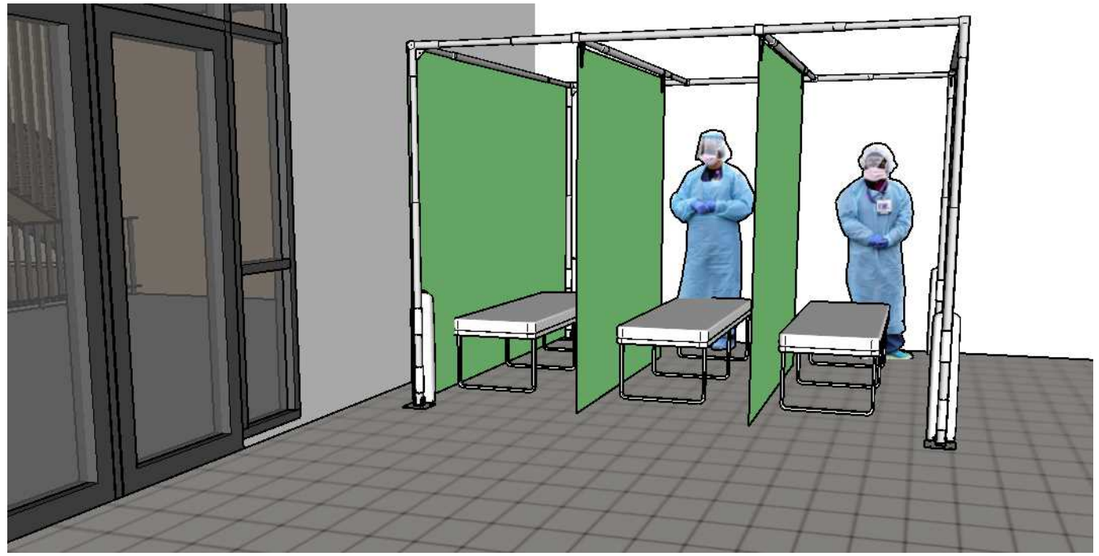

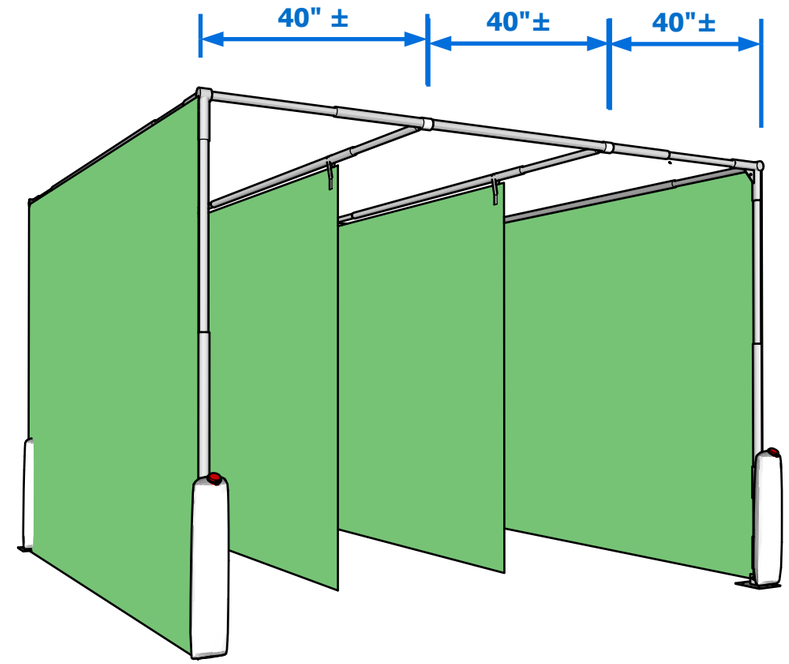

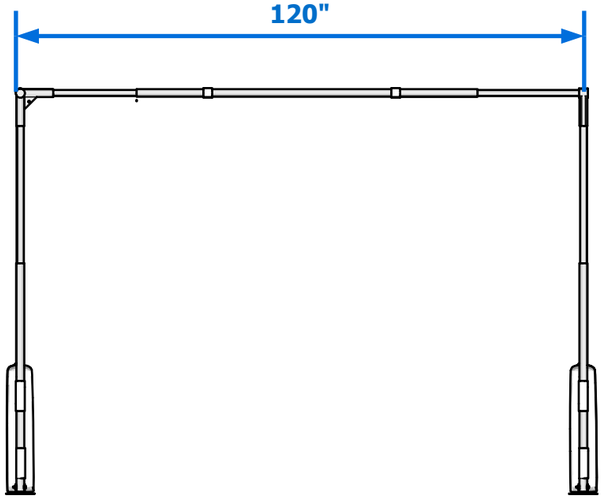

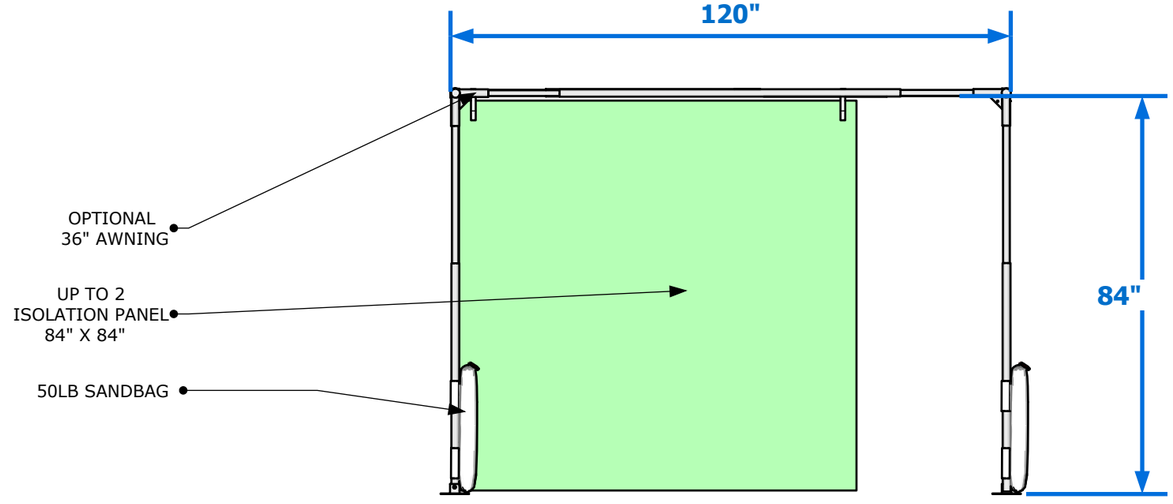

Frame Design: MedTent Interior Application
Frame Finish: Mill (Silver)
Fabric Type: Vinyl
Fabric Color: Green

PROJECT & CONTRACTOR

MedTent

MANUFACTURER NAME AND ADDRESS

AWNING WORKS INC.
10820 US HWY 19 N. - Clearwater, Fl 33764
Tel: 727.524.1118 - Fax: 727.524.3110
www.awningworksinc.com

STRUCTURAL ENGINEER

COPYRIGHT NOTES

COPYRIGHT ***AWNING WORKS INC.***
This document is the property of ***AWNING WORKS INC.*** and shall not be reproduced in whole or part without written consent of ***AWNING WORKS INC.*** Alteration, highlights, remarks or other markings to this document are not permitted.

Revision: 0
Sheet: A1
Date: 6/11/2020